Ethernet Spanner
Master to master data exchange, NAT router, 16 digital PNP inputs
TBEN-L5-EN1

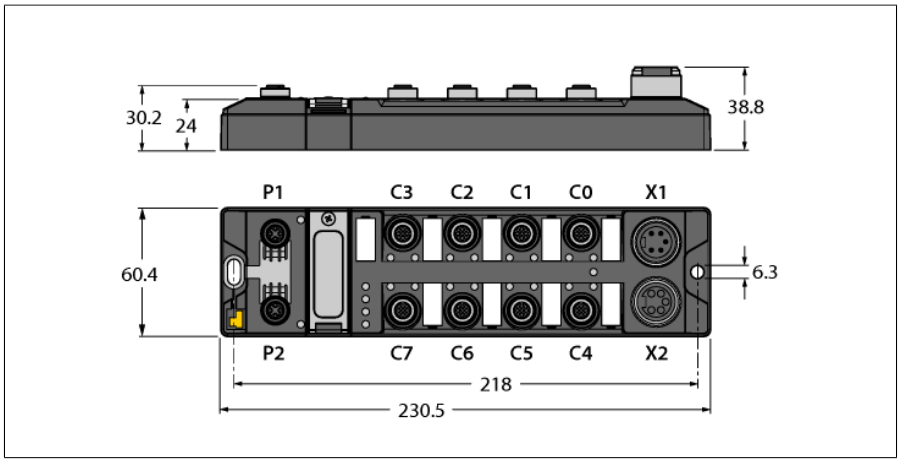

Type	TBEN-L5-EN1
ID	6814035
Supply	
Supply voltage	24 VDC
Voltage supply connection	7/8″, 5-pin
Operating current	V1: max. 150 mA
Sensor/actuator supply	supply of ports C0-C7 from V1 short-circuit proof, 120 mA per port
Electrical isolation	galvanic isolation of the voltage groups V1 and V2, voltages up to 500 VAC
Fault exclusion	Yes, acc. to EN ISO 13849-2, appendix D.2
Power dissipation, typical	≤ 5 W
System data	
Fieldbus transmission rate	10/100 Mbps
Fieldbus connection technology	2 × M12, 4-pin, D-coded
Web server	default: 192.168.1.254
Service interface	Ethernet via P1
Modbus TCP	
Addressing	Static IP, BOOTP, DHCP
Supported function codes	FC1, FC2, FC3, FC4, FC5, FC6, FC15, FC16, FC23
Number of TCP connections	8
Ethernet/IP	
Addressing	acc. to EtherNet/IP specification
Class 1 connections (CIP)	3

- Two separate, electrically isolated Ethernet interfaces
- Bidirectional data exchange between two controllers
- Protocols: EtherNet/IP, Modbus TCP and PROFINET
- PROFINET is supported on Ethernet port P2
- 1:1 NAT router
- 10 Mbps/100 Mbps
- 2 × M12, 4-pin, D-coded, Ethernet fieldbus connection
- Glass fiber reinforced housing
- Shock and vibration tested
- Fully potted module electronics
- Protection classes IP65, IP67, IP69K
- 5-pin 7/8″ male connector for power supply
- Galvanically isolated voltage groups support passive safety
- ATEX Zone 2/22
- Input diagnostics per port

Edition • 2024-10-02T19:46:27+02:00

PROFINET	
Addressing	DCP
Conformance class	B (RT)
MinCycleTime	1 ms
Fast Start-Up (FSU)	< 150 ms
Diagnostics	acc. to PROFINET alarm handling
Topology detection	supported
Automatic addressing	supported

Digital inputs	
Number of channels	16
Connectivity inputs	M12, 5-pin
Input type	PNP
Type of input diagnostics	Group diagnostics
Switching threshold	EN 61131-2 Typ 3, PNP
Low-level signal voltage	< 5 V
High level signal voltage	> 11 V
Low level signal current	< 1.5 mA
High level signal current	> 2 mA
Input delay	2.5 ms
Electrical isolation	Galvanically isolated to the fieldbus Voltage proof up 500 VDC

Standard/Directive conformity	
Vibration test	Acc. to EN 60068-2-6 Acceleration up to 20 g
Shock test	acc. to EN 60068-2-27
Drop and topple	acc. to EN 60068-2-31/IEC 60068-2-32
Electromagnetic compatibility	Acc. to EN 61131-2
Approvals and certificates	CE and UKCA FCC statement, FM class I, zone 2, UV resistant acc. to DIN EN ISO 4892-2A (2013)
UL Certificate	cULus LISTED 21 W2, Encl.type 1 IND.CONT.EQ.
Note on ATEX/IECEx	The Quick Start Guide with information on use in Ex Zones 2 and 22 must be observed.

General Information	
Dimensions (W x L x H)	60.4 x 230.5 x 38.8 mm
Ambient temperature	-40…+70 °C
Storage temperature	-40…+85 °C
Altitude	Max. 5000 m
Protection class	IP65 IP67 IP69K
MTTF	205 years acc. to SN 29500 (Ed. 99) 20 °C
Housing material	PA6-GF30
Housing color	Black
Connector material	Nickel-plated brass
Window material	Lexan
Material screw	303 stainless steel
Material label	Polycarbonate
Halogen-free	yes
Mounting	2 mounting holes □ 6.3 mm

	Note on the type designation: TBEN-L5-EN1 and TBEN-L1-EN1 are identical types of devices and have the same ID number!

Edition • 2024-10-02T19:46:27+02:00

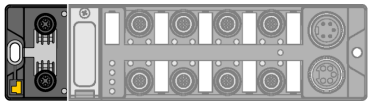	**Note** P1: External network P2: Local network Ethernet cable (example): RSSD-RSSD-4416-2M Ident. no. 6441652	M12 x 1 Ethernet 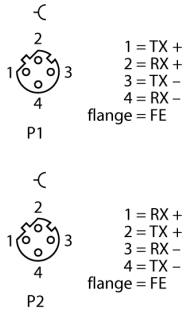
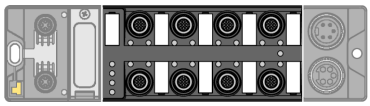	**Note** Actuator and sensor cable/PUR connection cable (example): RKC4.4T-2-RSC4.4T/TXL Ident-no. 6625608 Connection cable with Y piece for single assignment VBRS4.4-2RKC4T-1/1/TEL Ident. no. 6628199	M12 x 1 Input 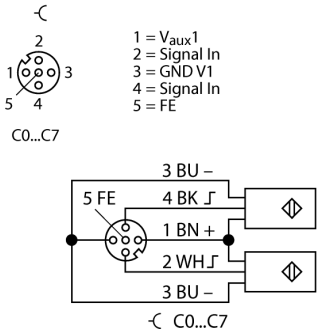
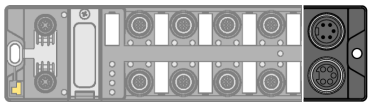	**Note** Power supply cable (example): RKM52-1-RSM52 ID number 6914149	7/8″ Power Supply

Module Status LED

LED	Color	Status	Description
ETH1 / ETH2	Green	ON	Ethernet link (100 Mbps)
		flashing	Ethernet communication (100 Mbps)
	Yellow	ON	Ethernet link (10 Mbps)
		flashing	Ethernet communication (10 Mbps)
		OFF	No Ethernet link
BUS	Green	ON	Active connection to a master
		flashing	Ready
	Red	ON	Network error or Restore Mode or Modbus timeout
		flashing	Blink/Wink command active
		OFF	Power off
ERR	Green	On	No diagnostics available
	Red	On	Diagnostics available Undervoltage diagnosis response is parameter dependent
PWR	Green	On	V_1 power supply OK
		Off	V_1 power supply off or below defined threshold of 18 V

LED Status I/O

LED	Color	Status	Description
LED 0 … 15	Green	ON	Input active
	Red	Flashing	Power overload at the corresponding port. Both port LEDs are flashing.
		OFF	Input inactive

Process Data Mapping of the Single Protocols

For more details on the corresponding protocols see manual.

Modbus TCP Register Mapping

The address ranges are valid for both networks.

	Reg	Bit 15	Bit 14	Bit 13	Bit 12	Bit 11	Bit 10	Bit 9	Bit 8	Bit 7	Bit 6	Bit 5	Bit 4	Bit 3	Bit 2	Bit 1	Bit 0
Inputs (RO)	0x0000	DI15 C7P2	DI14 C7P4	DI13 C6P2	DI12 C6P4	DI11 C5P2	DI10 C5P4	DI9 C4P2	DI8 C4P4	DI7 C3P2	DI6 C3P4	DI5 C2P2	DI4 C2P4	DI3 C1P2	DI2 C1P4	DI1 C0P2	DI0 C0P4
Status (RO)	0x0001	-	FCE	SPE1	SPE2	CFG	COM	V1	-	V2	-	-	-	-	-	-	Diag Warn
Diag (RO)	0x0002	-	-	-	-	-	-	-	-	-	-	-	-	-	-	-	I/O Diag
Spanner Input Data (RO)	0x3000 - 0x30FF	256 Bytes															
Spanner Output Data (WR)	0X3400 - 0x34ff	256 Bytes															
I/O Diag (RO)	0xA000									SCS7	SCS6	SCS5	SCS4	SCS3	SCS2	SCS1	SCS0

EtherNet/IP™ data mapping with activated scheduled diagnostics, default settings

The address ranges are valid for both networks.

	Word	Bit 15	Bit 14	Bit 13	Bit 12	Bit 11	Bit 10	Bit 9	Bit 8	Bit 7	Bit 6	Bit 5	Bit 4	Bit 3	Bit 2	Bit 1	Bit 0
Input data (station -> scanner)																	
GW status	0	-	FCE	SPE1	SPE2	CFG	COM	V1	-	V2	-	-	-	-	-	-	Diag Warn
Inputs	1	DI15 C7P2	DI14 C7P4	DI13 C6P2	DI12 C6P4	DI11 C5P2	DI10 C5P4	DI9 C4P2	DI8 C4P4	DI7 C3P2	DI6 C3P4	DI5 C2P2	DI4 C2P4	DI3 C1P2	DI2 C1P4	DI1 C0P2	DI0 C0P4
Diag 1	2	-	-	-	-	-	-	-	-	-	-	-	-	-	-	-	I/O Diag
Diag 2	3									SCS7	SCS6	SCS5	SCS4	SCS3	SCS2	SCS1	SCS0
Spanner	4-132	256 bytes data exchange															
Output data (scanner -> station)																	
	0-3	reserved															
Spanner	4-132	256 bytes data exchange															

PROFINET process data

	Byte	Bit 7	Bit 6	Bit 5	Bit 4	Bit 3	Bit 2	Bit 1	Bit 0
Inputs	0	DI7 C3P2	DI6 C3P4	DI5 C2P2	DI4 C2P4	DI3 C1P2	DI2 C1P4	DI1 C0P2	DI0 C0P4
	1	DI15 C72	DI14 C7P4	DI13 C6P2	DI12 C6P4	DI10 C5P2	DI9 C5P4	DI8 C4P2	DI7 C4P4

Key:

DIx	Digital input channel x	CFG	I/O configuration error
DOx	Digital output channel x	FCE	I/O-ASSISTANT Force Mode active
Cx	Port x	I/ODiag	I/O diagnostics connected
Px	Pin x	SchedDiag	Manufacturer-specific diagnostics configured and active
DiagWarn	Diagnostic at least on 1 channel	SCSx	Short-circuit at port x
V1	Undervoltage V1	SCG1	Short-circuit supply ports C0-C3
V2	Undervoltage V2	SCG2	Short-circuit supply ports C4-C7
COM	Communication error on internal module bus	SCOx	Short-circuit output channel x
SPEx	Spanner port active		

Edition • 2024-10-02T19:46:27+02:00