K90LWBGYRPQ
LED Signal Light – Beacon

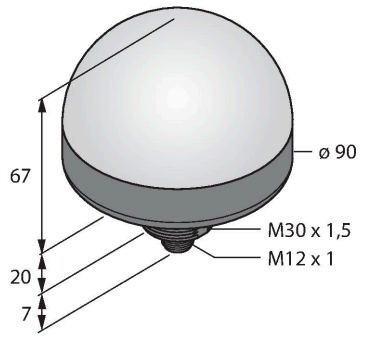

Technical data

Type	K90LWBGYRPQ
ID	3092824
Signal and display data	
Purpose	LED indicator light
Function	Spotlight
Light type	White Blue Green Yellow Red
LED service life (L70)	50000 h
Dimmable	No
Features of color 1	White, Permanently on, 200 lm
Features of color 2	Blue, 55 lm
Features of color 3	Green, 150 lm
Features of color 4	Yellow, 35 lm
Features of color 5	Red, 65 lm
Electrical data	
Operating voltage U_B	12…30 VDC
Max. current consumption per color	475 mA
Input power	5.7 W
Input type	PNP
Response time typical	< 75 ms
Mechanical data	
Cascadable	No
Design	Dome, K90L
Dimensions	Ø 90 x 87 mm
Housing material	Plastic, PC

Features

- All-round LED display
- Protection class IP67
- Mechanical screw-in thread M30 x 1.5
- M12 x 1 male, 8-pin
- Polychrome: White (COL 1) / Blue (COL 2) / Green (COL 3) / Yellow (COL 4) / Red (COL 5)
- Flashing function (1.6 Hz) selectable via function input
- Operating voltage: 12…30 VDC
- Individually controllable
- Inputs: PNP

Wiring diagram

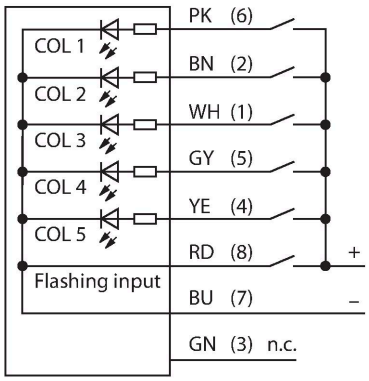

Functional principle

The LED display is suitable for industrial use thanks to its rugged design in protection class IP67. The LED display is on during the input signal period
Only a color at any time lights up. Higher color numbers override lower. COL 3 overrides for example COL 1 and 2.
If the function input is connected to the supply voltage, the function switches from steady on to flashing.

K90LWBGYRPQ| 04-03-2025 13-02 | Technical modifications reserved

Technical data

Window material	Polycarbonate, diffuse
Electrical connection	Connector, M12 × 1, PVC
Number of cores	8
Ambient temperature	-40…+50 °C
Protection class	IP67
Tests/approvals	
Approvals	CE, UL listed

Accessories

SMB30A	3032723
	Mounting bracket, rectangular, stainless steel, for sensors with 30mm thread

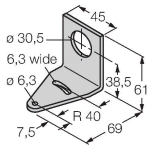

SMB30FA	3074005
	Montagewinkel; Werkstoff VA 1.4401

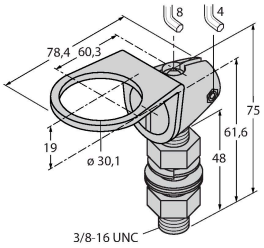

SMB30SC	3052521
	Mounting bracket, PBT black, for sensors with 30 mm thread, rotatable

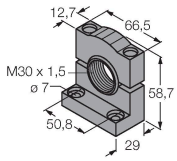

Accessories

Dimension drawing	Type	ID	
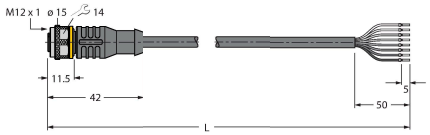	RKC8T-2/TEL	6625130	Connection cable, M12 female connector, straight, 8-pin, cable length: 2 m, jacket material: PVC, black; cULus approval
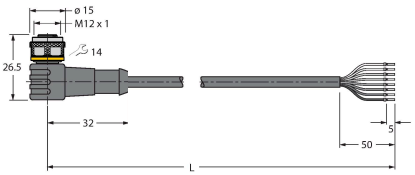	WKC8T-2/TEL	6625133	Connection cable, M12 female connector, angled, 8-pin, cable length: 2 m, jacket material: PVC, black; cULus approval

K90LWBGYRPQ | 04-03-2025 13-02 | Technical modifications reserved